REV.	ECN NO.	LOCATIONS	DESCRIPTION	DATE	DESIGN
A1			Update some details	08/22'25	Davis

CUSTOMER DRAWING

RoHS Compliant

ORDERING INFORMATION

PD1176F - 01V000 G 05
[1] [2] [3] [4]

[1] PRODUCT SERIES
Pogo connector – Female type.

[2] SPEC NOTES.:
1Pin/5.90mm Height/Vertical

[3] PLATING MATERIAL:
G: Gold(Au).

[4] PLATING THICKNESS:
05: 5u"

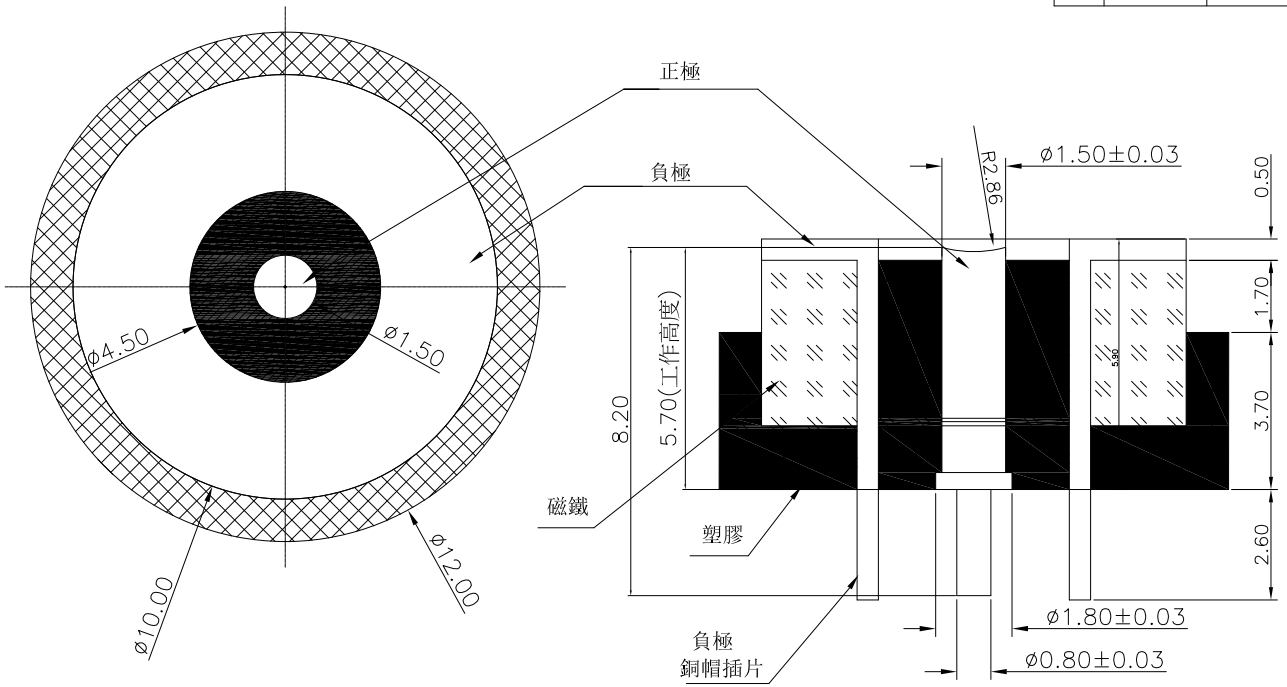

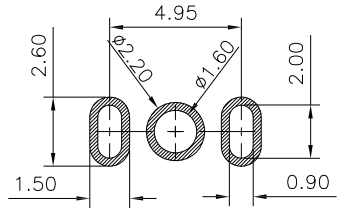

Recommended pcb layout
General tolerance:±0.05mm

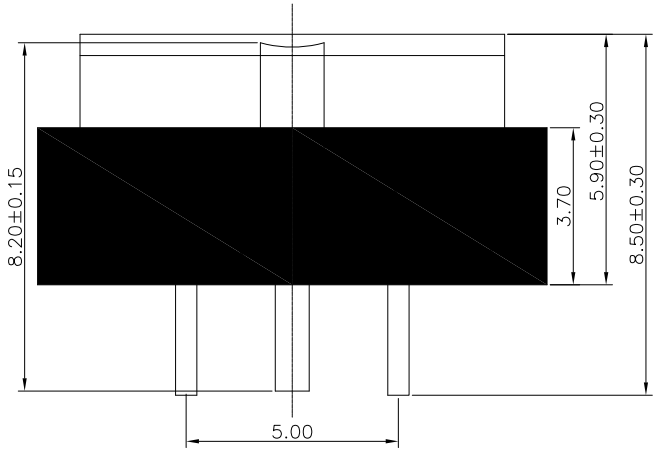

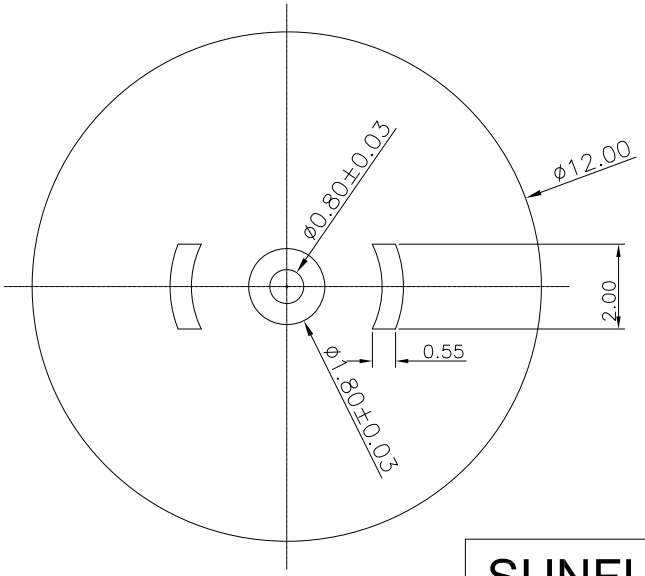

NOTES:

(1)Material:
1. Barrel: Copper Alloy.
2. Housing: High Temperature Thermoplastic, UL 94V–0.
3. Magnets: NdFeB Magnet
4. Copper cap insert: Copper Alloy

(2)Plating:
1. Plunger: 5u" Gold plated over Nickel under–plated over all.
2. Barrel: 5u" Gold plated over Nickel under–plated over all.

(3)Electrical:
1. Current Rating :5.0A AC/DC max.
2. Voltage Rating :16V AC/DC max.
3. Contact Resistance: 50mΩmax.

DIM	TOL	DIM	TOL
X.X	±0.30	X.X°	±3.0°
X.XX	±0.20	X.XX°	±2.0°
X.XXX	±0.10	X.XXX°	±1.0°

SUNFUN		SUNFUN TECHNOLOGY LTD		
DRAW NO.	PD1176F(A1)	DATE	MATERIAL: SEE NOTES	DRAW NAME: POGO PIN CONN – Female/Vertical 1PIN/ Height 5.90MM
DESIGN:	Davis	08/22'25	FINISH: SEE NOTES	
CHECK:	Davis	08/22'25	FILE: PD1176F(A1)	MODEL: POGO-PIN CONN
REVIEW:	Wilson	08/22'25	P/N: PD1176F-01V000G05	UNIT: mm / SHEET: 1/1
APPROVED	Wilson	08/22'25	REV. A1 / SCALE	